| REVISIONS | | | | |
|---|---|---|---|---|
| ZONE | REV | DESCRIPTION | DATE | APPROVED |

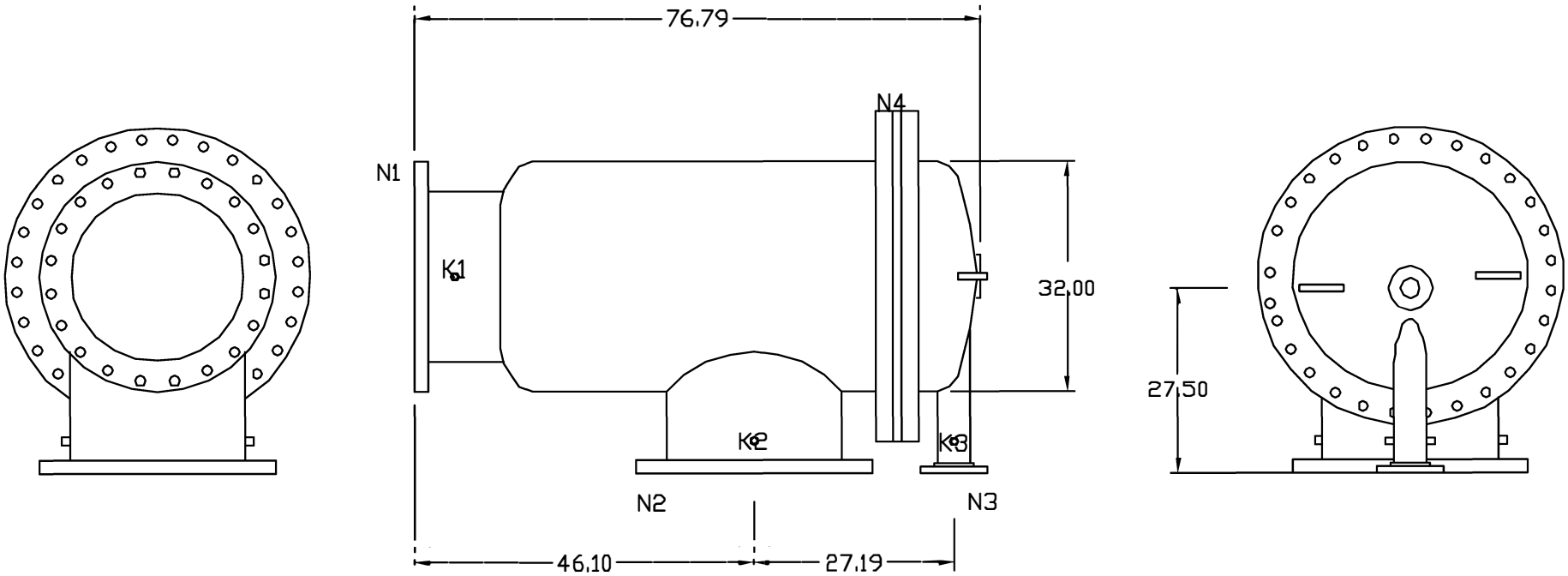


| TECHNICAL DATA | |
|---|---|
| Flow Rate | Max. 10,000 GPM |
| Screen Size | ___ Micron |
| Screen Area | 24.0 sq.ft |
| Working Temp. | 200 deg. F |
| Working Pressure | 200 PSI |
| Empty Weight | 2000 lbs. |
| Full Weight | 4200 lbs. |

| NOZZLE | CONNECTION | TYPE OF CONNECTION | SIZE | RATING |
|---|---|---|---|---|
| K1 | Hi. Press. Conn. | Threaded | 1/4" NPT(2) | |
| K2 | Low Press. Conn. | Threaded | 1/4" NPT(2) | |
| K3 | Hydraulic Conn. | Threaded | 1/4" NPT(2) | |
| N1 | Inlet | Flanged | 20" ANSI | 150 lbs. F.F. |
| N2 | Outlet | Flanged | 20" ANSI | 150 lbs. F.F. |
| N3 | Flushoutlet | Threaded | 4" ANSI | 150 lbs. F.F. |
| N4 | Connection Flange | Flanged | 32" AWWA | 150 lbs. F.F. |

UNLESS OTHERWISE SPECIFIED
DIMENSIONS ARE IN INCHES
TOLERANCES
DECIMALS .XX ± .05 .XXX ± .01
ANGULAR ± 0.5 DEG.

| DRAWN | DATE |
|---|---|
| Daniel Stenberg | 3-3-09 |
| CHECKED | |
| DESIGN | |

FLTR Purple Engineering

TITLE: MTF 20-S

| SIZE | DWG NO. | REV |
|---|---|---|
| A | MTF20-S | 0 |

NOT TO SCALE | SHEET OF